SOLATUBE 290 DS
(14 IN / 350 MM)
CURB CAP
HARD CEILING

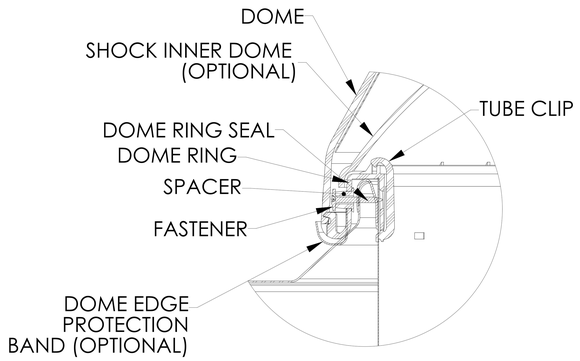

DETAIL A
SCALE 3 : 1

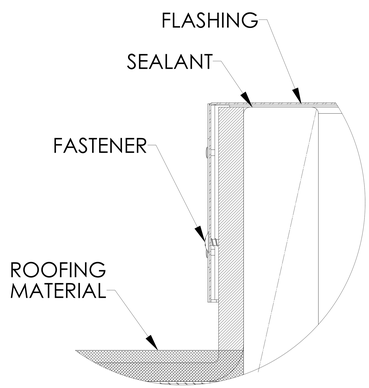

DETAIL B
SCALE 3 : 1

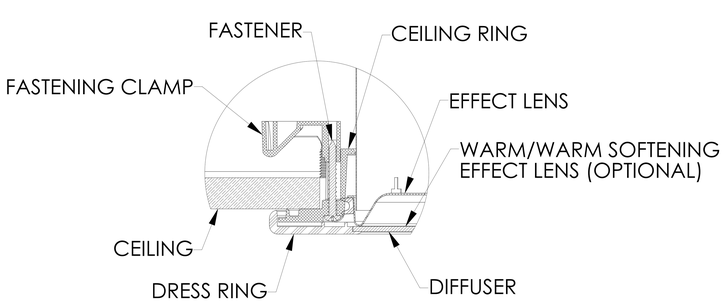

DETAIL C
SCALE 3 : 1

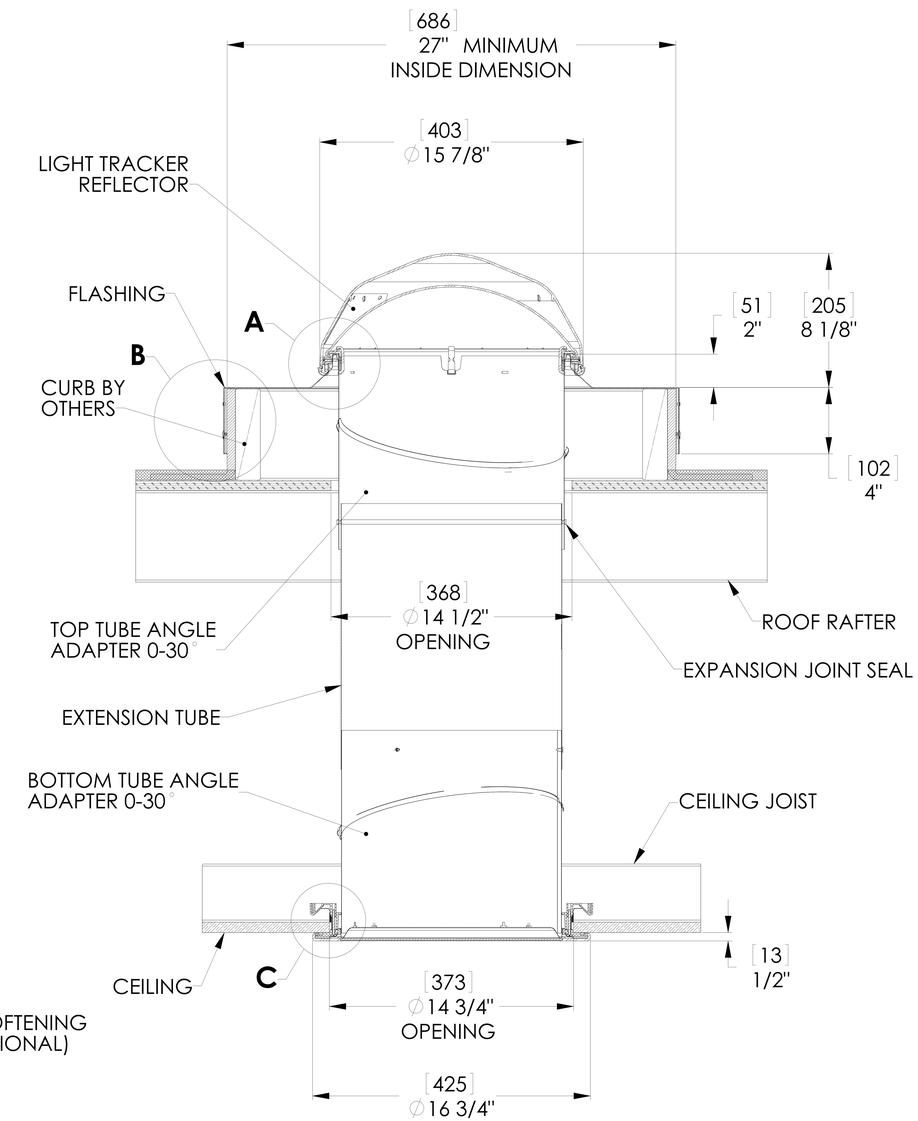

FULL SECTION
SCALE 1:1

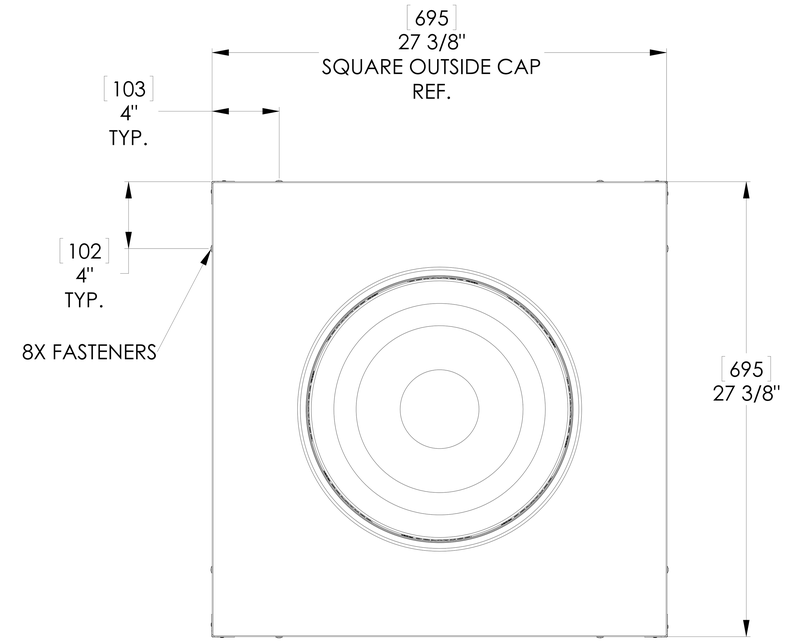

TOP VIEW

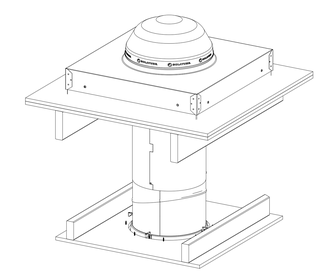

NOTES:

1. STRUCTURAL ELEMENTS (PLYWOOD, RAFTERS, DRYWALL ETC. BY OTHERS & SHOWN FOR REFERENCE ONLY.
2. ALL TUBE JOINTS & SEAMS TAPED WITH 2" FOIL TAPE (NOT SHOWN).
3. DIMENSIONS IN BRACKETS ARE METRIC UNLESS OTHERWISE SPECIFIED.
4. 6" MIN CLEARANCE SHOULD BE MAINTAINED FROM ALL SOLATUBE COMPONENTS AND OTHER PLENUM COMPONENTS.

Ovlašteni zastupnik za Hrvatsku:
QUADRATUM d.o.o.
B.Zadre 14, Sesvete, Zagreb
Tel: 01 2027 072, Mob: 091 2345 129
info@quadratum.hr, www.quadratum.hr

UNLESS OTHERWISE SPECIFIED:
DIMENSION TOLERANCE
FRACTIONS ± 1/4"
INCH .X ± .1 .XX ± .06
MILLIMETER [.X] ± 2.5 [.XX] ± 1.5

MATERIAL --
--
FINISH --
DO NOT SCALE DRAWING

SOLATUBE INTERNATIONAL, INC.
COPYRIGHT 2013
WWW.SOLATUBE.COM

DRAWN BY STEVENS — DATE 10/4/10
CHECKED BY -- — DATE --
APPROVED BY -- — DATE --

SOLATUBE
2210 OAK RIDGE WAY
VISTA, CALIFORNIA 92081-8341
PH (760) 597-4400

TITLE: SOLATUBE 290 DS CURB CAP HARD CEILING

SIZE D — DWG. NO. WEB-290DS-CF-HC — REV 3
SCALE: 1:1 — SHEET 1 OF 1