SOLATUBE 750 DS-O
(21 IN/530 MM)
CURB CAP OPEN CEILING - NO ANGLE ADAPTER

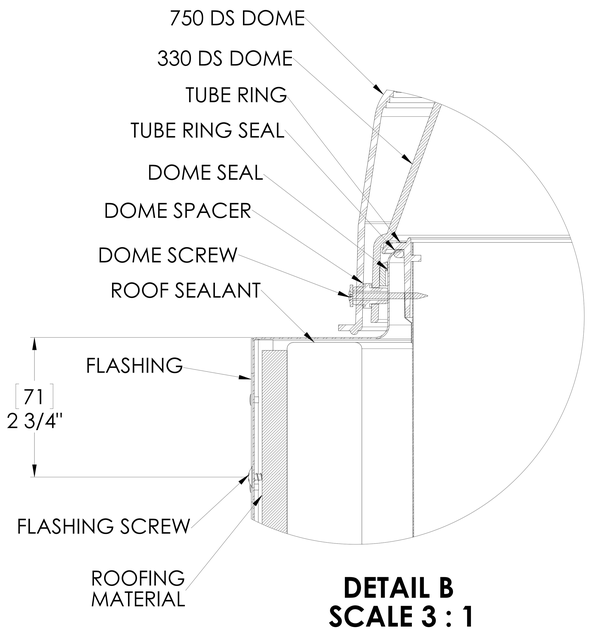

DETAIL B
SCALE 3 : 1

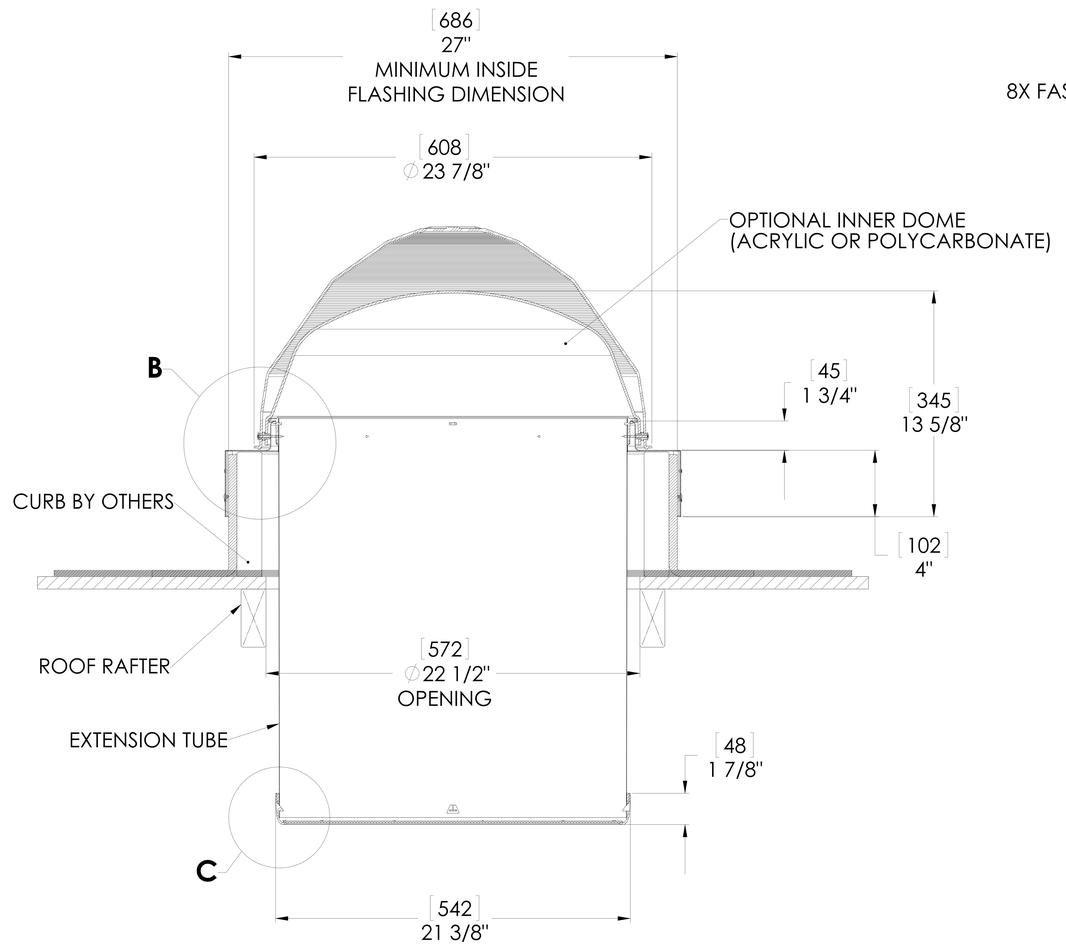

FULL SECTION
SCALE 1:1

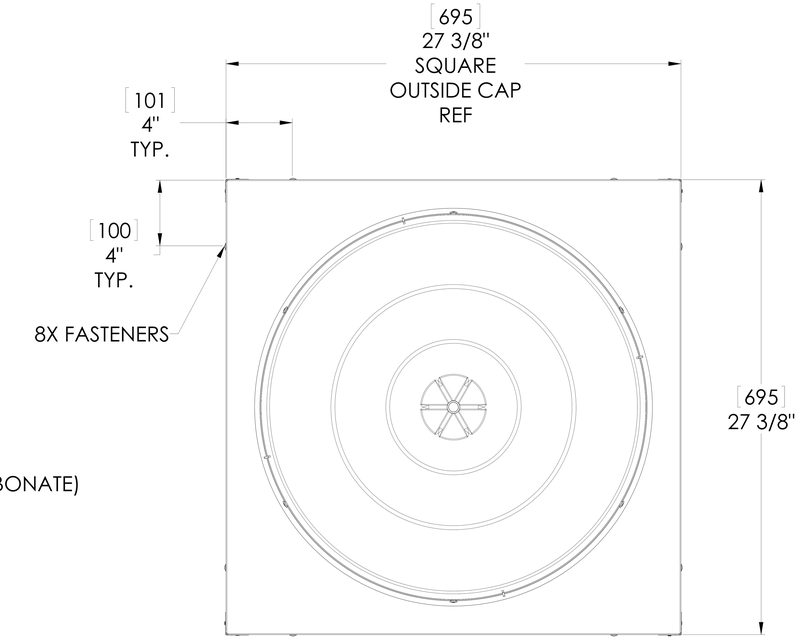

TOP VIEW
SCALE 1:1

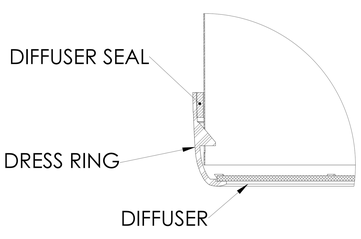

DETAIL C
SCALE 3 : 1

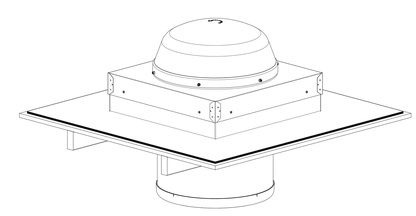

NOTES:

1. STRUCTURAL ELEMENTS (PLYWOOD, RAFTERS, DRYWALL ETC.) BY OTHERS & SHOWN FOR REFERENCE ONLY.
2. ALL TUBE JOINTS & SEAMS TAPED WITH 2" FOIL TAPE (NOT SHOWN).
3. DIMENSIONS IN BRACKETS ARE METRIC UNLESS OTHERWISE SPECIFIED.
4. 6" MIN CLEARANCE SHOULD BE MAINTAINED FROM ALL SOLATUBE COMPONENTS AND OTHER PLENUM COMPONENTS.

Ovlašteni zastupnik za Hrvatsku:
QUADRATUM d.o.o.
B.Zadre 14, Sesvete, Zagreb
Tel: 01 2027 072, Mob: 091 2345 129
info@quadratum.hr, www.quadratum.hr

UNLESS OTHERWISE SPECIFIED: DIMENSION TOLERANCE FRACTIONS ± 1/4" INCH .X ± .1 .XX ± .06 MILLIMETER [.X] ± 2.5 [.XX] ± 1.5	SOLATUBE INTERNATIONAL, INC. COPYRIGHT 2013 WWW.SOLATUBE.COM	SOLATUBE 2210 OAK RIDGE WAY VISTA, CALIFORNIA 92081-8341 PH (760) 597-4400
MATERIAL -- --	DRAWN BY STEVENS / DATE 3/2/09	TITLE: 750 DS-O (21") CURB CAP OPEN CEILING
FINISH --	CHECKED BY -- / DATE --	SIZE / DWG. NO. WEB-750-CF-OC-NA / REV 2
DO NOT SCALE DRAWING	APPROVED BY -- / DATE --	SCALE: 1:1 / SHEET 1 OF 1