SOLATUBE 330 DS-O
(21 IN/530 MM)
8" SELF FLASHING OPEN CEILING - ANGLE ADAPTER

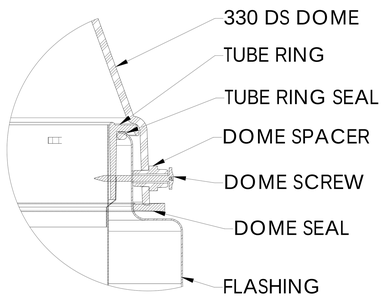

DETAIL B
SCALE 3 : 1

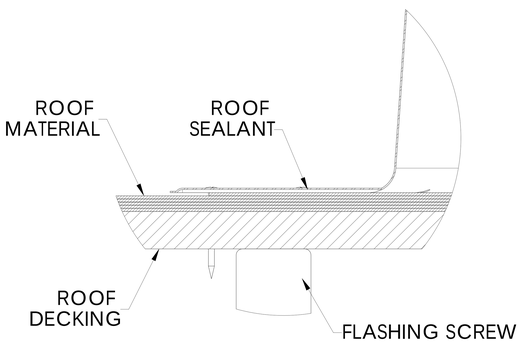

DETAIL C
SCALE 3 : 1

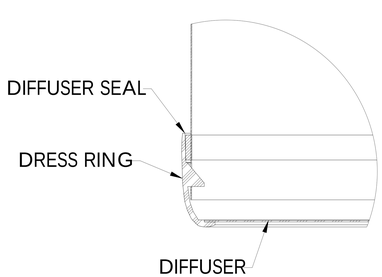

DETAIL D
SCALE 3 : 1

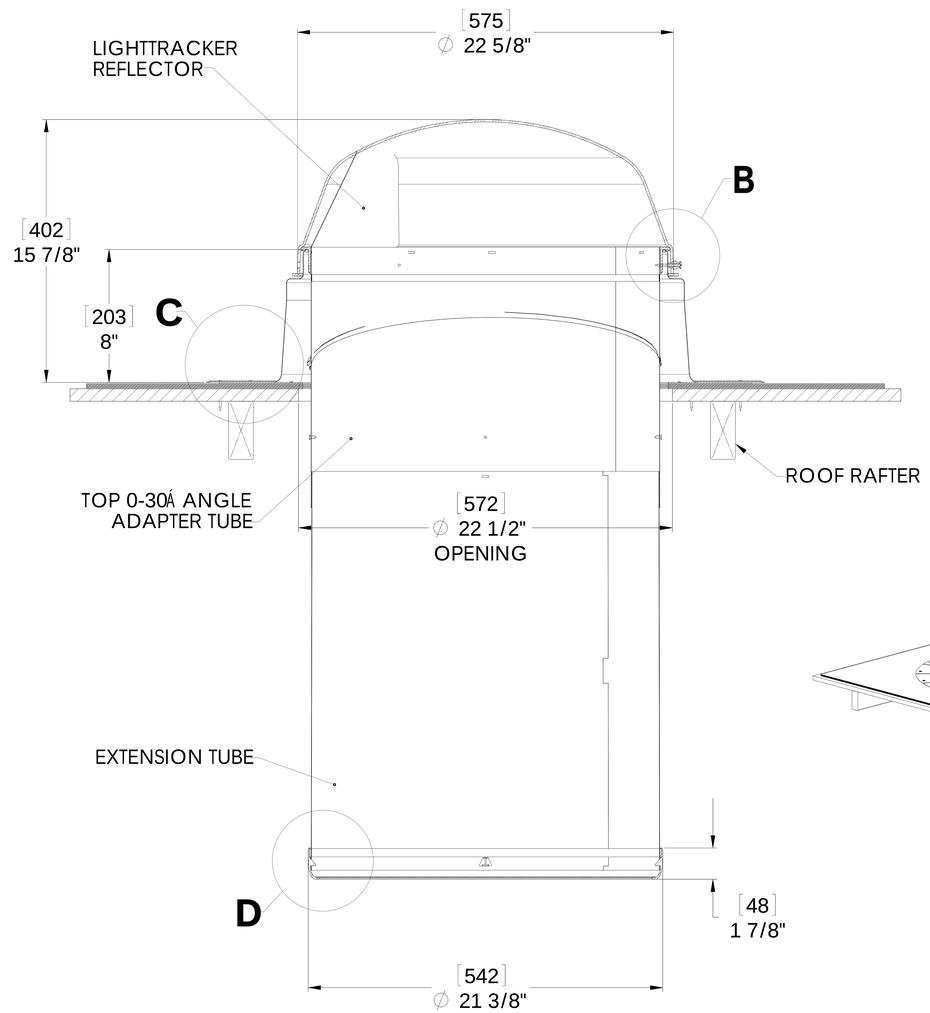

FULL SECTION
SCALE 1:1

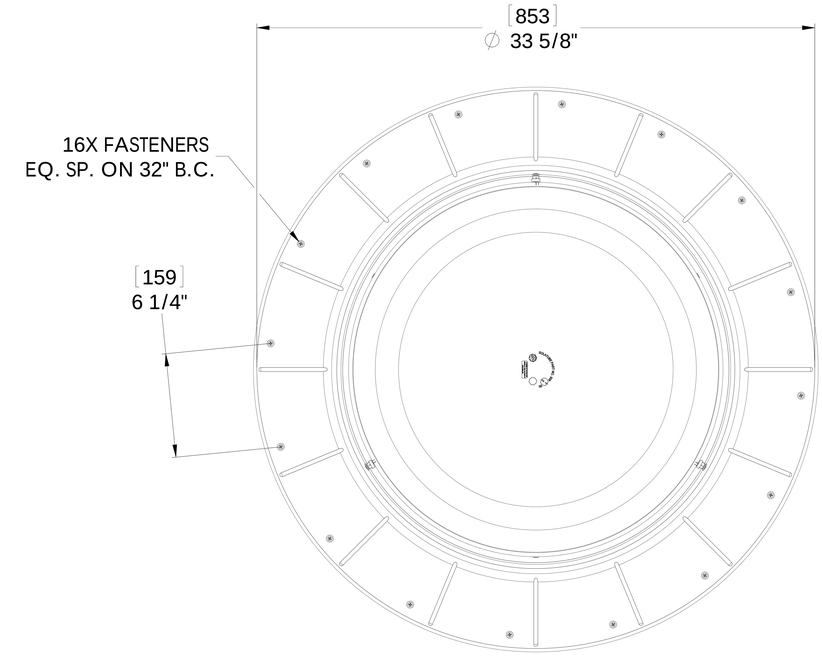

TOP VIEW
SCALE 1 : 2

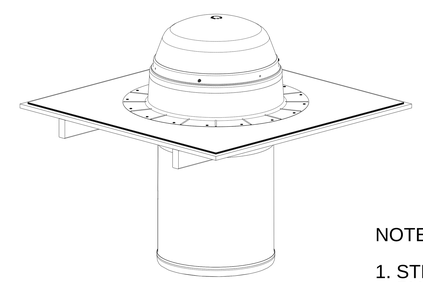

NOTES:

1. STRUCTURAL ELEMENTS (PLYWOOD, RAFTERS, DRYWALL ETC.) BY OTHERS & SHOWN FOR REFERENCE ONLY.
2. ALL TUBE JOINTS & SEAMS TAPED WITH 2" FOIL TAPE (NOT SHOWN).
3. DIMENSIONS IN BRACKETS ARE METRIC UNLESS OTHERWISE SPECIFIED.
4. 6" MIN CLEARANCE SHOULD BE MAINTAINED FROM ALL SOLATUBE COMPONENTS AND OTHER PLENUM COMPONENTS.

Ovlašteni zastupnik za Hrvatsku:
QUADRATUM d.o.o.
B.Zadre 14, Sesvete, Zagreb
Tel: 01 2027 072, Mob: 091 2345 129
info@quadratum.hr, www.quadratum.hr

UNLESS OTHERWISE SPECIFIED:
DIMENSIONS ARE IN INCHES
TOLERANCES:
ANGULAR: Ñ0.5Á
.X Ñ .1
.XX Ñ .02
.XXX Ñ .005

MATERIAL
--
--

FINISH
--

DO NOT SCALE DRAWING

SOLATUBE INTERNATIONAL, INC.
COPYRIGHT 2009
WWW.SOLATUBE.COM

DRAWN BY: STEVENS — DATE: 3/2/09
CHECKED BY: -- — DATE: --
APPROVED BY: -- — DATE: --

SOLATUBE
2210 OAK RIDGE WAY
VISTA, CALIFORNIA 92081-8341
PH (760) 597-4400

TITLE: **330 DS (21") SELF-FLASHING OPEN CEILING**

SIZE | DWG. NO. **WEB-330-SF8-OC-AA** | REV **1**
SCALE: 1:1 | SHEET 1 OF 1